Offer July 2013

Kannegiesser®

Tunnel-Finisher

SMT-1/250-Gas-Stand. A-V/F-X
year 04/2006
gas-heated
250 pieces/hour
with

Feeding station

TL-RA 3-0198 90855

Division into 3 phases

The central climatic chamber has a chamber at either end arranged at an angle of 90 degrees. The incoming articles are pre-heated. The saturated steam is sprayed onto the article from nozzles positioned in the lower part of the chamber. In the subsequent second phase the steam is injected from above at high pressure and greater kinetic energy through precisely defined nozzle diameters into the flow of hotair. The steam gives off its heat more quickly to the articles than the hot air, resulting in a high level of treatment intensity. The permanent availability of a controlled mixture of steam and hot air causes the articles to heat up quickly without ever allowing them to become over-dry. The protection of the fabric and avoidance of creased seams are taken for granted. In the very short third phase hot air is simply applied to the articles before the final chamber begins the coolingdown phase.

ECOTEX
LAUNDRY SYSTEMS

Diagram division into 3 phases

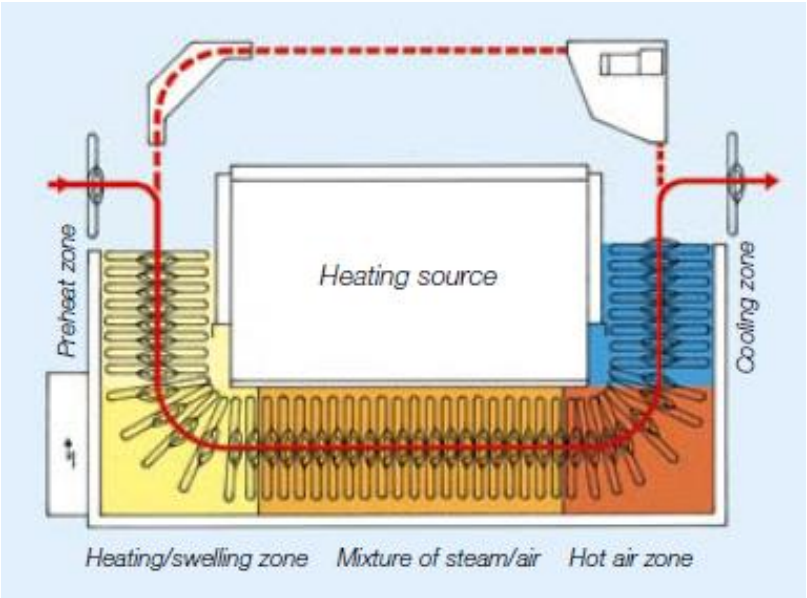

Function diagram

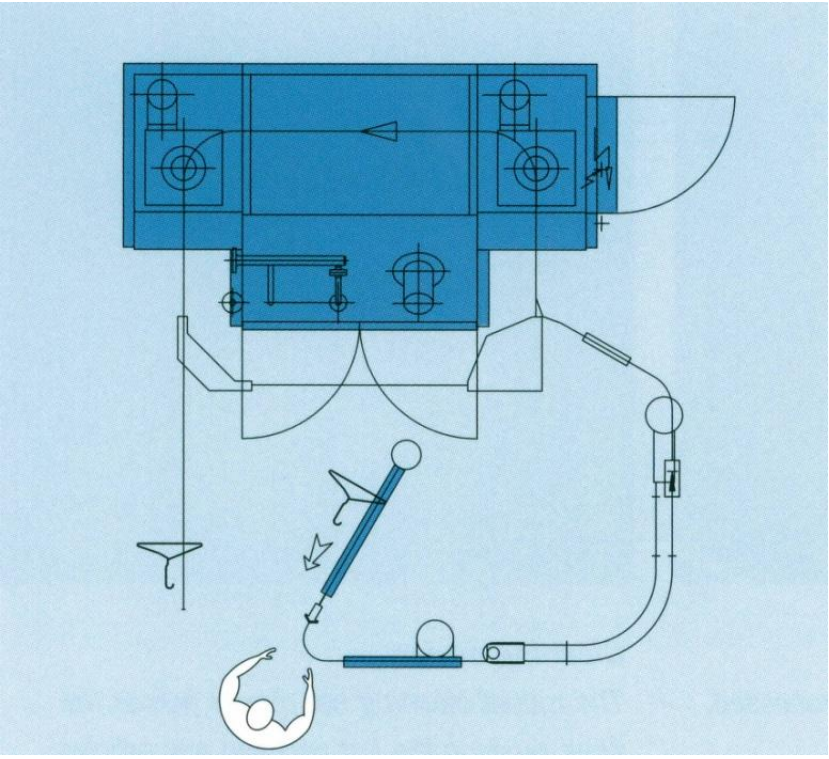

ECOTEX
LAUNDRY SYSTEMS

Feeding machine

EMD-40(37)-01+2-1/2/4

year 07/2007

2 feeding stations, brush-feature, table-cloth machinery

Universal combination feeding machine designed for two main applications

- medium capacity at a high quality output
- high capacity in 2 lane operation

This model is ideal for feeding a wide range of items for which a high quality standard is required. These include light weight polyester cotton sheets through to table cloths. Maximum capacity: up to 850 large items per hour, processed in single lane or in combined 1- and 2-lane operation or maximum1350 items in two lane operation. Of course also small pieces can be fed.

ECOTEX LAUNDRY SYSTEMS

Function diagram

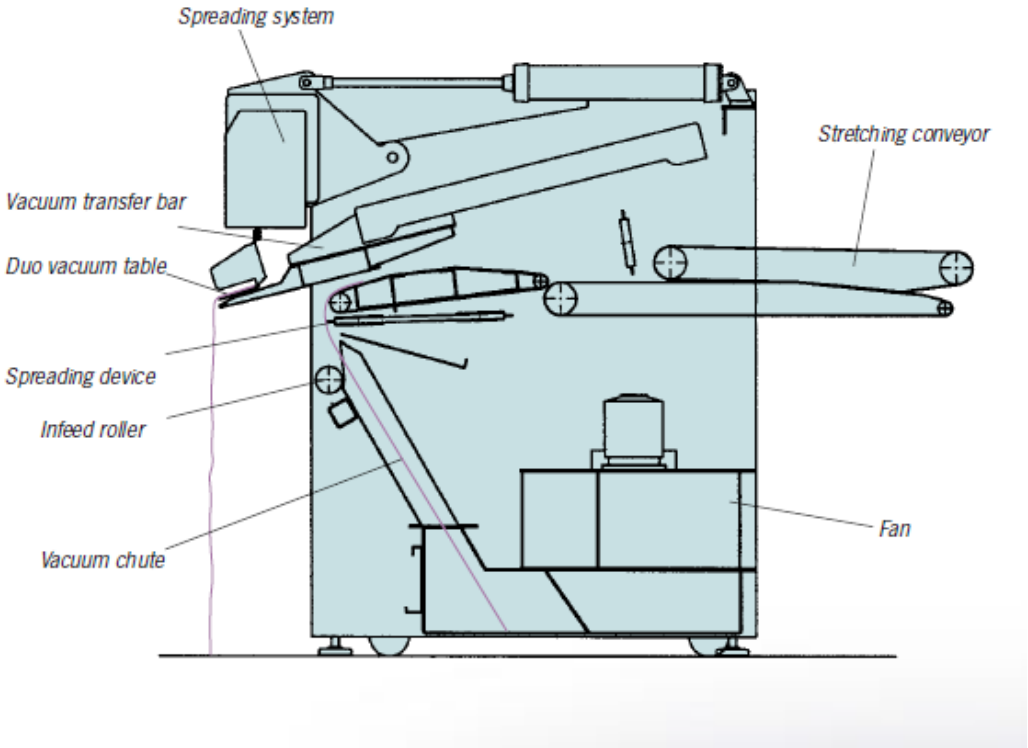

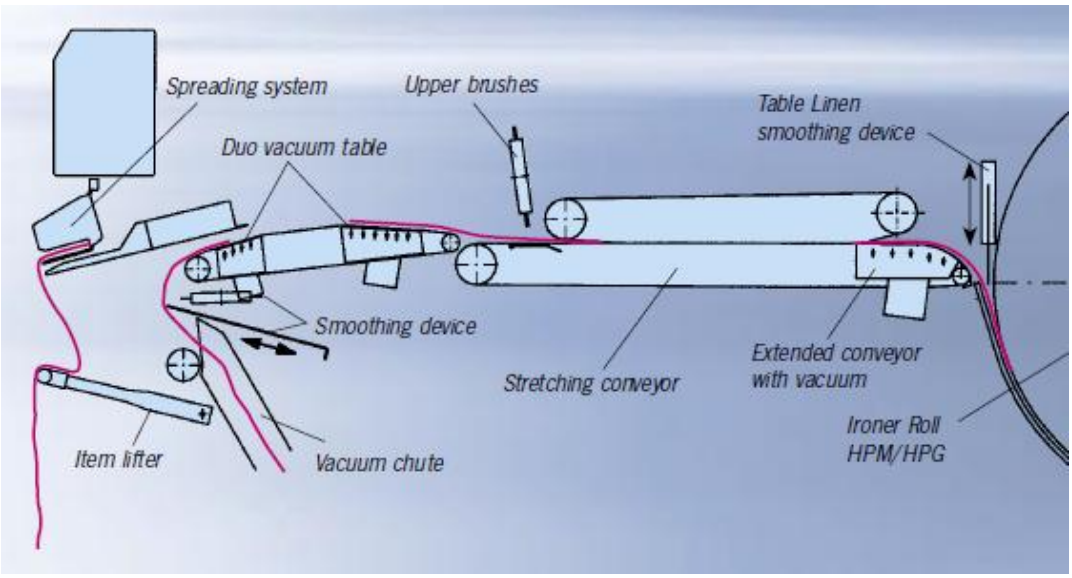

More information at www.ecotex.de

Please contact us and we will send you an offer!

ECOTEX
LAUNDRY SYSTEMS